BATTERY CHARGER

3546 LI

Li-Ion Charger

The Mascot 3546 LI is a compact and reliable lithium-ion battery charger designed for safe, efficient charging. With intelligent charging technology, built-in safety features, and worldwide compatibility, it delivers dependable performance for medical and industrial applications.



KEY FEATURES

Mascot Blueline

- UL recognized
- Medically Certified
- EXCH AC Plugs

Customizable (on request)

- Color(s)
- Cables (primary/secondary)
- Charging curves

Made in Europe

- Designed in Norway
- Made in Estonia

AVAILABLE VERSIONS

CELLS / V	MAX CHARGE CURRENT	MAX OUTPUT POWER	INPUT VOLTAGE	EFFICIENCY
1 cell	2.5 A	10.5 W	90–264 V AC	0.7
2 cells	2.5 A	21 W	90–264 V AC	0.85
3 cells	2.2 A	27.7 W	90–264 V AC	0.85
4 cells	1.6 A	26.9 W	90–264 V AC	0.85
5 cells	1.35 A	28.4 W	90–264 V AC	0.85
6 cells	1.15 A	29 W	90–264 V AC	0.85
7 cells	1 A	29.4 W	90–264 V AC	0.85
8 cells	0.85 A	28.6 W	90–264 V AC	0.85
10 cells	0.7 A	29.4 W	90–264 V AC	0.85
14 cells	0.5 A	29.4 W	90–264 V AC	0.85

CERTIFICATIONS

Safety	Medical EN 60601-1 / Home Healthcare EN 60601-1-11 (VNOM≥110VAC) / Battery Charger EN 60335-2-29
EMC	EN 55014-1 and –2, EN 61000-6-3, EN 61000-6-1, EN 60601-1-2

GENERAL CHARACTERISTICS

Input voltage: / Line frequency	90 - 264VAC / 47 - 63Hz
Step 0 > 10min Red (4 blinks)	0A / 0V
Charge timer (step2, CV)	1h
Safety timer (all steps) Red (5 blinks)	72h
Step 3 (Charge Completed) Green	0A
Formation Charge (Step 0)	Low current start-up of deeply discharged battery.
Wake-up of deeply discharged battery.	Yes, will apply voltage which deactivates deep discharge protection in battery pack.
Indication when “Battery not connected”	Flashing Green (1s/1s)
NTC input, on request (std is 10kohm, B-value approx. 4000)	0 – 45 °C: Normal charge. Battery temperature < 0 °C (too cold) or > 45°C (too hot): No charge, wait until temp. is OK.
Ripple	< 100mV p-p
Switch frequency approx.	35kHz
Leakage current from battery with mains switched off	< 300 µA at nominal battery voltage (< 0.22 Ah/month)
Protection	Protected against reversed polarity. Error Indication: Red (2 blinks) Short circuit proof. Error Indication: Red (3 blinks) Charging of wrong lower voltage battery pack will be limited to 100mA and terminated after 10min. Indication: Red (4 blinks) Safety timer. Error Indication: Red (5 blinks) No charge (or charge terminated) if connecting wrong battery pack with higher voltage. Indication: LED is OFF.
Temperature Range	Operating: ÷25 to +40oC. Storage: ÷25 to +85oC
Insulation class	Class II

Insulation voltage: Primary – secondary	4000VAC / 5700VDC
Input terminal	2-pins IEC 320 connector for exchangeable mains plug (EU, US, UK and AUS) or mains cord with C7 connector.
Output terminals	Cord with/without plug. Exchangeable plugs available.
IP Rating	IP41

For a detailed breakdown of characteristics for all versions, see the full technical specification 'Tech Spec' on the product web page.

MECHANICAL

Dimensions	123.5 × 49.5 × 37 mm
Weight	220g

TECHNICAL DRAWING

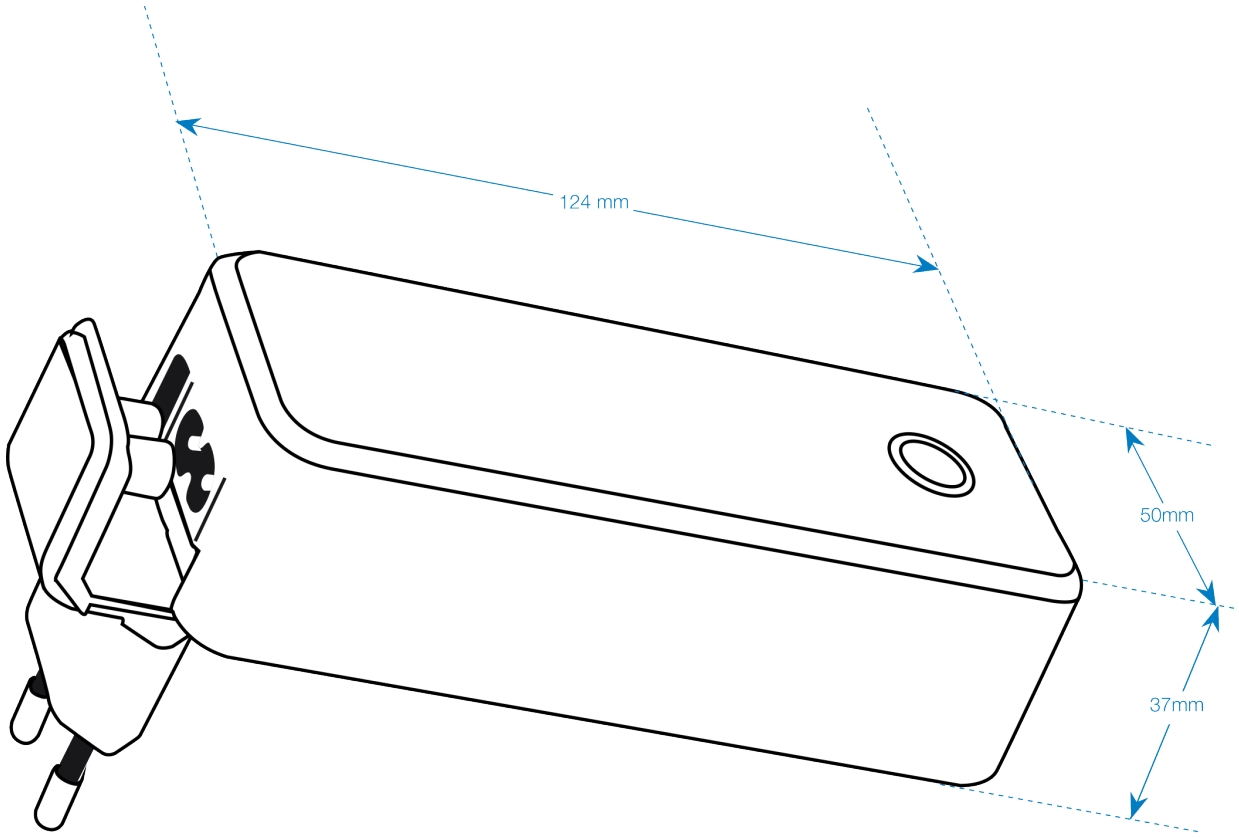

LI-ION CHARGER DIAGRAM D

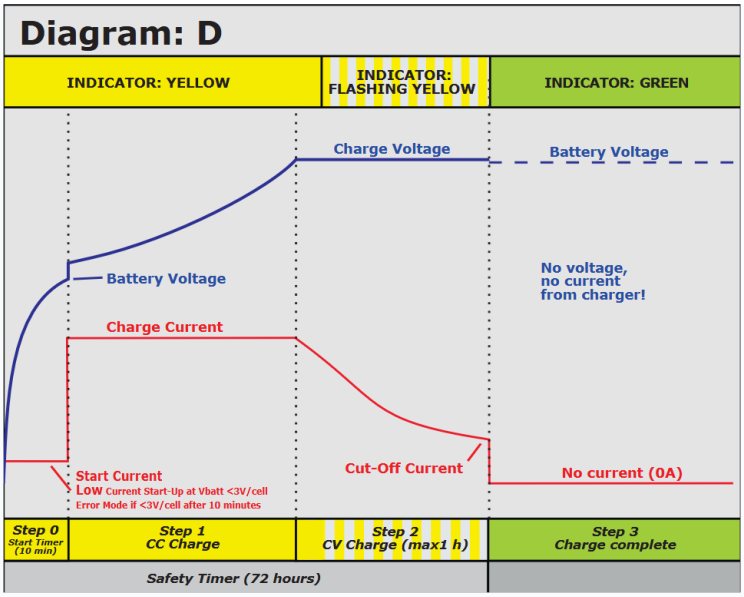

Charging method D
STEP 1 - CONSTANT CURRENT CHARGE
Charge cycle starts automatically when input is connected to mains and battery is connected to the output. The charger is in constant current mode (CC), charging with the maximum current indicated on the charger. The LED-indication on the charger is YELLOW. This step allows rapid charging of your battery until the battery reaches typically 80-95% of its capacity.
NOTE! If battery is less than 3V/cell, charger will apply low current start up. If normal voltage is not reached during start timer period, charge will terminate and 4 red blinks error will be indicated.
STEP 2 - CONSTANT VOLTAGE (TIMER) CHARGE
The charger is in constant voltage mode (CV). Charge current is decreasing.
The LED-indication on the charger is changed to FLASHING YELLOW shortly after entering this mode. The charger will remain in this mode until the current has decreased to end of charge detection level or until CV timer runs out. The battery is charged to its full capacity at the end of this step.
STEP 3 - CHARGE COMPLETE
The LED-indication on the charger is GREEN and the battery is fully charged. The charge current is zero and the battery has been charged to its full capacity. Charger may remain connected to the battery. A new charge cycle will be initiated if battery voltage decrease with 0.1V/cell.
BATTERY NOT CONNECTED INDICATIONS
Battery not connected is indicated by FLASHING GREEN. In this mode charger will apply short pulses attempting to wake up deeply discharged batteries.
ERROR INDICATIONS
• 2 red blinks: Battery is connected to charger with wrong polarity!
• 3 red blinks: Charger output is shorted. Check output cable connection!
• 4 red blinks: Battery voltage is low. Check battery status or voltage.
• 5 red blinks: Safety timer has run out. Check battery status or capacity.
• LED off: Battery voltage is too high. Check battery voltage.
WAIT MODE INDICATIONS
• Yellow with 1 red blink: Battery temperature is too low (<0°C)
• Yellow with 2 red blinks: Battery temperature is too high (>45°C)

ACCESSORIES



Exch AC Plug Blueline EU
Part no. 128000



Exch AC Plug Blueline US
Part no. 128100



Exch AC Plug Blueline UK
Part no. 128200



Exch AC Plug Blueline AUS
Part no. 128300



AC Cord 2-pin IEC 60320 EU
Part no. 131306



AC Cord 2-pin IEC 60320 UK
Part no. 131148



AC Cord 2-pin IEC 60320 AUS
Part no. 013108



AC Cord 2-pin IEC 60320 US_
Part no. 131368



Wall Mount Bracket Exch AC Plug Blueline
Part no. 127400

For all available/compatible accessories, see the product web page.